Post-Fire Erosion Control Research on the San Dimas Experimental Forest: Past and Present

Peter M. Wohlgemuth

Abstract

The San Dimas Experimental Forest (SDEF) was established in the early 1930s to document and quantify wildland hydrology in the semiarid chaparral-covered steeplands of southern California. Concomitantly, the nearly seventy years of accumulated watershed research in this fire-prone ecosystem has produced invaluable information on post-fire erosion and the effectiveness and consequences of post-fire erosion control treatments. On average, first-year post-fire watershed sediment yield is 35 times greater than comparable unburned annual levels. This accelerated erosion can cause site degradation and threatens life, property, and infrastructure at the adjacent wildland/urban interface. To mitigate undesirable consequences of post-fire accelerated erosion, land managers have developed a program of hillslope and stream channel emergency rehabilitation treatments as erosion control measures. The SDEF has been the site on which many of these erosion control practices, both past and present, have been tested. In the 1960s, some labor-intensive treatments were shown to have no effect on reducing post-fire erosion. At the same time, more radical ground-disturbing treatments that were marginally effective in the short-term have persisted on the landscape and altered the subsequent sediment fluxes through these watersheds. In September 2002, virtually the entire SDEF burned in the Williams Fire. This allowed the implementation of a new series of emergency rehabilitation treatments for which the effects and consequences are largely unknown. Preliminary results suggest that an aerial application of polyacrylamide did nothing to reduce post-fire sediment yield, but that prefabricated wooden channel checks may be an effective post-fire rehabilitation tool.

Keywords: erosion, fire, erosion control, post-fire rehabilitation

Wohlgemuth is a Hydrologist at the U.S. Department of Agriculture, Forest Service, Pacific Southwest Research Station, Riverside Forest Fire Laboratory, Riverside, CA 92507. E-mail: pwohlgemuth@fs.fed.us.

Introduction

Wildfire can dramatically alter the erosion response of upland landscapes. With the removal of the vegetation canopy and surface organic material, rainfall interception is reduced (Hamilton and Rowe 1949) and the denuded hillsides are subjected to unimpeded raindrop impacts (Wells 1981). In addition, the combustion of soil organic matter can create a subsurface water-repellent layer that restricts infiltration and promotes overland flow (DeBano 1981), enhancing sediment yield (Hamilton et al. 1954, Pase and Ingebo 1965, Heede et al. 1988). In southern California, first-year post-fire sediment yield is 35 times greater on average than comparable unburned annual levels (Rowe et al. 1954).

Post-fire erosion, sedimentation, and flooding are ongoing problems in the fire-prone ecosystems of the southwestern United States. The climatic patterns that produce highly flammable brush vegetation also generate weather conditions that promote high-severity wildfires. Accelerated post-fire erosion and flooding can threaten life, property, and infrastructure at the wildland/urban interface, where burgeoning population centers impinge on adjacent steep mountain fronts.

To mitigate undesirable consequences of post-fire accelerated erosion, land managers have developed a program of hillslope and stream channel emergency rehabilitation treatments as erosion control measures. The goal of these treatments is to cost-effectively protect the onsite and downstream values at risk until the native vegetation community can be reestablished. Unfortunately, the benefits of many of these

erosion control measures have yet to be quantitatively demonstrated in rigorous field studies (Robichaud et al. 2000). However, some of the best post-fire erosion control research over the last half-century has been conducted on the San Dimas Experimental Forest.

Site description

Located in a front range of the San Gabriel Mountains about 45 km northeast of Los Angeles, California, the San Dimas Experimental Forest (SDEF) is a 6945 ha research preserve administered and operated by the USDA Forest Service, Pacific Southwest Research Station (Figure 1). With its headquarters at Tanbark Flat (34° 12' N latitude, 117° 46' W longitude), the SDEF has been the site of extensive hydrologic monitoring for nearly seventy years.

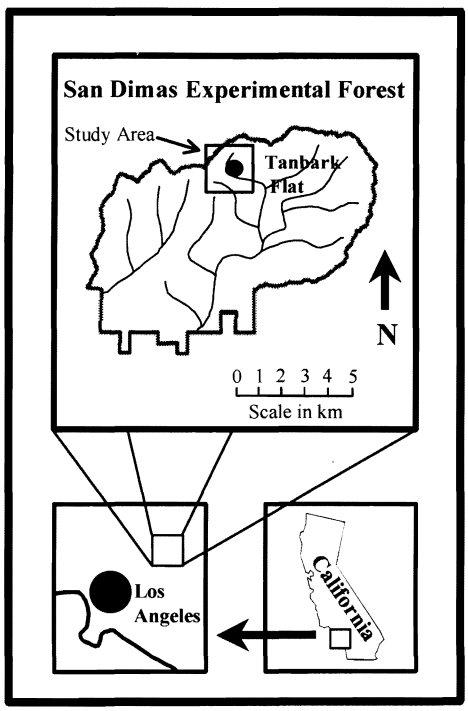

Figure 1. Location map of the San Dimas Experimental Forest.

Topography in the SDEF consists of a highly dissected mountain block with narrow, steep-walled canyons (slope angles average 68 percent) and steep channel gradients (average of 15 percent). Elevations range from 457 m to 1677 m. Bedrock geology is dominated by Precambrian metamorphics and Mesozoic granitics that produce shallow, azonal, coarse-textured soils (Dunn et al. 1988).

The SDEF experiences a Mediterranean climate, characterized by cool, moist winters and hot, dry summers. Mean annual precipitation, falling almost exclusively as rain, is 714 mm (62-year record), but rain during individual years can range from 258 to 1595 mm. Over 90 percent of the annual precipitation falls between the months of November and April, with 10 percent of the storms producing over 50 percent of the total rain (Wohlgemuth 1996).

Vegetation in the SDEF consists primarily of mixed chaparral. Plant cover on south-facing slopes ranges from dense stands of chamise (*Adenostoma fasciculatum*) and ceanothus (*Ceanothus* spp.) to more open stands of chamise and sage (*Salvia* spp.). North-facing hillsides are dominated by scrub oak (*Quercus berberidifolia*) and ceanothus, with occasional hardwood trees – live oak (*Quercus agrifolia*) and California laurel (*Umbellularia californica*) – occurring on moister shaded slopes and along the riparian corridors (Wohlgemuth 1996). Forest species, dominated by Big Cone spruce (*Pseudotsuga macrocarpa*), occur in the higher elevation eastern end of the SDEF (Dunn et al. 1988).

Post-fire erosion control treatments

Landscape-level post-fire erosion control treatments attempt to reduce and delay the onslaught of accelerated sediment yield that typically follows a wildfire. Many types of treatments, both on the hillslopes and in the stream channels, have been utilized over the years. These usually take the form of mechanical barriers to retain debris or enhanced ground covers to reduce the erosive power of rainsplash and overland flow. Modern treatments also include applications of chemical wetting agents or soil flocculants to promote infiltration. For a review and extensive discussion of post-fire rehabilitation treatments, see Robichaud et al. (2000).

Methods

The effectiveness of the different erosion control treatments on the SDEF was evaluated by comparing the sediment yield from small headwater catchments. Sediment was trapped and measured behind earth-filled dams. Sediment yields were calculated using an engineering end-area formula (Eakin 1939) based on repeated sag tape surveys of permanent cross sections (Ray and Megahan 1978). To normalize for catchments of different sizes, comparisons in

sediment yield were made as cubic meters per hectare.

Johnstone Fire

The Johnstone Fire burned nearly the entire SDEF in July of 1960. Following the fire, twenty watersheds were selected for study that were as similar as possible in size (.75-2.5 ha), shape, and aspect. As there was no pre-treatment calibration of sediment yields between the study watersheds, inherent site differences in potential erodibility were assessed (based on slope angle, channel gradient, rockiness, and soil depth) and distributed evenly among the treatments.

Four seeding treatments and three types of mechanical barriers were tested as post-fire erosion control measures. The seeding treatments consisted of broadcast sowing a mixture of annual grasses at rates of 0.46 kg/ha and 3.66 kg/ha, as well as broadcast sowing a mixture of perennial grasses at rates of 0.82 kg/ha and 3.66 kg/ha (Rice et al. 1965). In addition, the areas sown to perennials were sprayed with strong herbicides to help establish these grasses by reducing competition from the re-growing brush species.

The mechanical treatments after the Johnstone Fire included side slope stabilization, contour trenching, and channel stabilization (Rice et al. 1965). Side slope stabilization consisted of planting barley in hand-hoed rows at 0.6 m vertical contour intervals. As the intent was to create closely spaced barriers to the overland flow of water and sediment, this was considered a mechanical rather than a vegetative treatment. Contour trenches were created by cutting slightly insloped horizontal platforms across the hillslopes with a bulldozer. These benches – intended to break up overland flow, increase depression storage, and promote infiltration – were established as close together as the terrain would permit (12 m apart on gentler slopes and 27 m apart on steeper hillsides). Channel stabilization was accomplished by building small gravity check dams roughly 30 m apart using soil cement. Although these dams would trap only a small wedge of transported sediment, the intent of the barriers was to serve as grade control structures that would prevent channel incision that could produce landsliding on the adjacent hillsides (Rice et al. 1965).

The four vegetative treatments were crossed with the three mechanical treatments plus their corresponding controls to yield a five by four matrix design with one watershed unit per experimental cell. Analysis of the data was performed by multiple linear regression (Rice et al. 1965).

Williams Fire

Nearly all of the SDEF burned again in the Williams Fire of September 2002. Although several post-fire erosion control treatments were tested after this burn, only two are reported here. A portion of the burned area was sprayed with polyacrylamide (PAM), a proprietary soil-flocculating agent. Applied by a helicopter, the intent of this treatment is to aggregate the fine soil particles, thus promoting infiltration and thereby reducing overland flow (Flanagan and Chandhari 1999), especially in areas of suspected water repellent soils. Other sections of the Williams Fire were treated with FlowCheck™ log structures in the stream channels. Manufactured by Forest Concepts, LLC from small diameter tree sections (see Figure 2), these prefabricated barriers were placed roughly 5-10 m apart along the stream courses. They were intended to serve as storage sites and grade control structures to prevent the scouring of channel sediment deposits by the accelerated post-fire runoff.

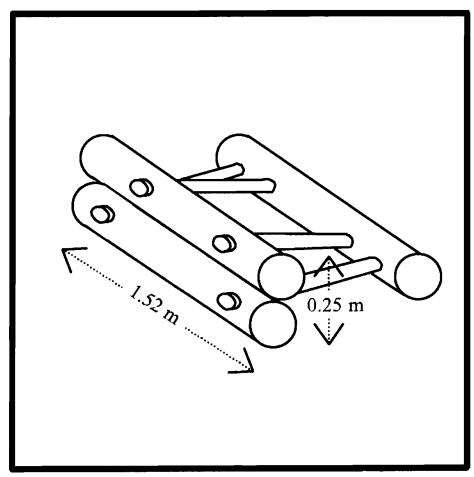

Figure 2. Schematic of a FlowCheck™ log structure.

Following the Williams Fire, four of the original twenty experimental watersheds were re-activated. One of these was sprayed with PAM, while an adjacent catchment was left untreated. After the Johnstone Fire, the PAM-treated watershed had check dams built in the channels, but the other had been subjected to side slope stabilization. Both these watersheds were seeded with annual grasses,

although at different densities. A third watershed had FlowCheck™ log structures placed in the stream channels, while a neighboring catchment was left untreated. After the Johnstone Fire, the FlowCheck™-treated watershed was not subjected to any vegetative treatment, but the neighboring control had been seeded with annual grasses. Both of these watersheds had contour trenches carved into the hillsides. Table 1 shows the relationships between the Johnstone Fire treatments and the subsequent Williams Fire erosion control measures. As the modern treatments are unreplicated, the resulting comparisons are not necessarily generalizable.

Table 1. Watersheds used to test both the Johnstone Fire and Williams Fire erosion control treatments.

Vegetative Treatment	**Mechanical Treatment**		
	Side Slope Stabilization	Contour Trenches	Channel Stabilization
None		FlowCheck™	
Low Density Annuals	PAM Control	FlowCheck™ Control	
High Density Annuals			PAM

Results and Discussion

For these studies, sediment yield is the integrated output of debris from a watershed unit that received a uniform experimental treatment. A danger in re-activating existing study watersheds is the persistence of the previous treatments. The residual effects of erosion control measures from the Johnstone Fire may have influenced the results of treatments applied after the Williams Fire. In fact, the contour trenching and herbicide measures following the Johnstone Fire have altered the sediment fluxes through these small watersheds (Wohlgemuth 1996). However, the seeding of annual grasses, the side slope stabilization, and the channel stabilization has had no apparent effect on subsequent vegetation development or long-term sediment fluxes (Wohlgemuth 1996). Thus, in terms of the effects on present sediment fluxes, both sets of Williams Fire treatments – the PAM-treated watershed and its associated control, and the FlowCheck™-treated catchment and its associated control – had comparable Johnstone Fire treatment histories.

Johnstone Fire

The first winter after the Johnstone Fire was one of the driest on record, so few of the seeded grasses germinated and little sediment yield was produced. The seeding and herbicide treatments were repeated the following year, and the study area received nearly normal rainfall amounts. However, second-year sediment yield values indicated that none of the seeding treatments were effective erosion control measures (Rice et al. 1965). In contrast, side slope stabilization, contour trenches, and channel stabilization generated 35, 40, and 65 percent, respectively, of the sediment yield produced from watersheds without mechanical treatments. From this, Rice et al. (1965) concluded that measures designed to prevent the concentrated flow of water and the entrainment of sediment were the superior erosion control treatments.

Williams Fire

In the first winter after the Williams Fire, the study area received slightly below normal precipitation. Moreover, the amounts and disposition of the rainfall were nearly identical to the second year after the Johnstone Fire: early gentle rains, followed by a dry period, then more intense storms later in the winter season.

The sediment yield results for the two post-fire treatment comparisons are arrayed in Table 2. Based on these preliminary data and invoking the caveat of no replication, the PAM treatment appears to have had no effect as an erosion control treatment. Observations on the study area over the course of the winter revealed pervasive rilling on all watersheds, indicating substantial surface runoff. Although infiltration tests were not performed on the sites, presumably the PAM did not work as it was intended. In contrast, the FlowCheck™ log structures appear to have reduced watershed sediment yield. Virtually all of the 23 structures filled with sediment and only a few were subject to undercutting or side cutting. The savings in debris retention and the protection against channel incision could easily account for the differences in reduced sediment yield compared to the control.

Table 2. Sediment yield after the Williams Fire.

Treatment	Sediment yield (m^3/ha)
PAM	
Treated	34.2
Control	26.0
FlowCheck	
Treated	11.1
Control	34.7

Conclusions

Accelerated post-fire erosion and sediment yield is an ongoing problem in fire-prone Southwestern ecosystems. Land managers will continue to seek erosion control measures that are both cost-effective and environmentally benign. However, it is critical that prospective treatments are rigorously tested before their widespread application.

Many lessons have been learned over the past half-century of post-fire erosion control research on the San Dimas Experimental Forest. Some labor-intensive treatments have been shown to be ineffective at reducing erosion or would not be cost-effective at a landscape level. Some ground-disturbing measures of moderate efficacy continue to persist long after the post-fire emergency is over. Moreover, these treatments have altered the sediment fluxes through these small study watersheds. Preliminary results suggest that PAM did nothing to reduce post-fire sediment yield, but that FlowCheck™ structures may be an effective post-fire rehabilitation tool. Continued study will help assess the effectiveness and consequences of the untested treatments applied following the Williams Fire of 2002.

Acknowledgments

The author thanks George Riechers and Ken Hubbert for their insightful reviews of a draft of this manuscript.

References

DeBano, L.F. 1981. Water repellent soils: A state-of-the-art. U.S. Department of Agriculture, Forest Service, Pacific Southwest Forest and Range Experiment Station, General Technical Report PSW-46.

Dunn, P.H., S.C. Barro, W.G. Wells, II, M.A. Poth, P.M. Wohlgemuth, and C.G. Colver. 1988. The San Dimas Experimental Forest: 50 years of research. U.S. Department of Agriculture, Forest Service, Pacific Southwest Forest and Range Experiment Station, General Technical Report PSW-104.

Eakin, H.M. 1939. Instructions for reservoir sedimentation surveys. In Silting of Reservoirs. U.S. Department of Agriculture, Technical Bulletin 524.

Flanagan, D.C., and K. Chandhari. 1999. Erosion control with polyacrylamide on steep slopes. In Proceedings of the Annual Meeting of the American Society of Agricultural Engineers, Toronto, Ontario, Canada, July 18-22, 1999, American Society of Agricultural Engineers, St. Joseph, MI.

Hamilton, E.L., J.S. Horton, P.B. Rowe, and L.F. Reimann. 1954. Fire-flood sequences on the San Dimas Experimental Forest. U.S. Department of Agriculture, Forest Service, California Forest and Range Experiment Station, Technical Paper 6.

Hamilton, E.L., and P.B. Rowe. 1949. Rainfall interception by chaparral in California. U.S. Department of Agriculture, Forest Service, California Forest and Range Experiment Station.
Heede, B.H., M.D. Harvey, and J.R. Laird. 1988. Sediment delivery linkages in a chaparral watershed following a wildfire. Environmental Management 12:349-358.

Pase, C.P., and P.A. Ingebo. 1965. Burned chaparral to grass: Early effects on water and sediment yields from two granitic soil watersheds in Arizona. In Arizona Watersheds, pp. 8-11. Arizona Water Board, Tempe, AZ.

Ray, G.A., and W.F. Megahan. 1978. Measuring cross sections using a sag tape: A generalized procedure. U.S. Department of Agriculture, Forest Service, Intermountain Experiment Station, General Technical Report INT-47.

Rice, R.M., R.P. Crouse, and E.S. Corbett. 1965. Emergency measures to control erosion after a fire on the San Dimas Experimental Forest. U.S. Department of Agriculture, Miscellaneous Publication 970.

Robichaud, P.R., J.L. Beyers, and D.G. Neary. 2000. Evaluating the effectiveness of postfire rehabilitation treatments. U.S. Department of Agriculture, Forest Service, Rocky Mountain Research Station, General Technical Report RMRS-63.

Rowe, P.B., C.M. Countryman, and H.C. Storey. 1954. Hydrologic analysis used to determine effects of fire on peak discharge and erosion rates in southern California watersheds. U.S. Department of Agriculture, Forest Service, California Forest and Range Experiment Station.

Wells, W.G., II. 1981. Some effects of brushfires on erosion processes in coastal southern California. In T.R.H. Davies and A.J. Pearce, eds., Erosion and Sediment Transport in Pacific Rim Steeplands, Christchurch, New Zealand, January 25-31, 1981, pp. 305-342. International Association of Hydrological Sciences, Washington, DC.

Wohlgemuth, P.M. 1996. Hillslope erosion, channel routing, and sediment yield in small semiarid watersheds, southern California. In J.M. Bernard, chairman, Sixth Federal Interagency Sedimentation Conference, Las Vegas, NV, March 10-14, 1996, pp. X-54 – X-61. Interagency Advisory Committee on Water Data, Subcommittee on Sedimentation, Washington, DC.